Electron S.R.L.

Design
Production &
Trading of
Educational
Equipment

B4520 AND B4521 – ANTENNA TRAINER

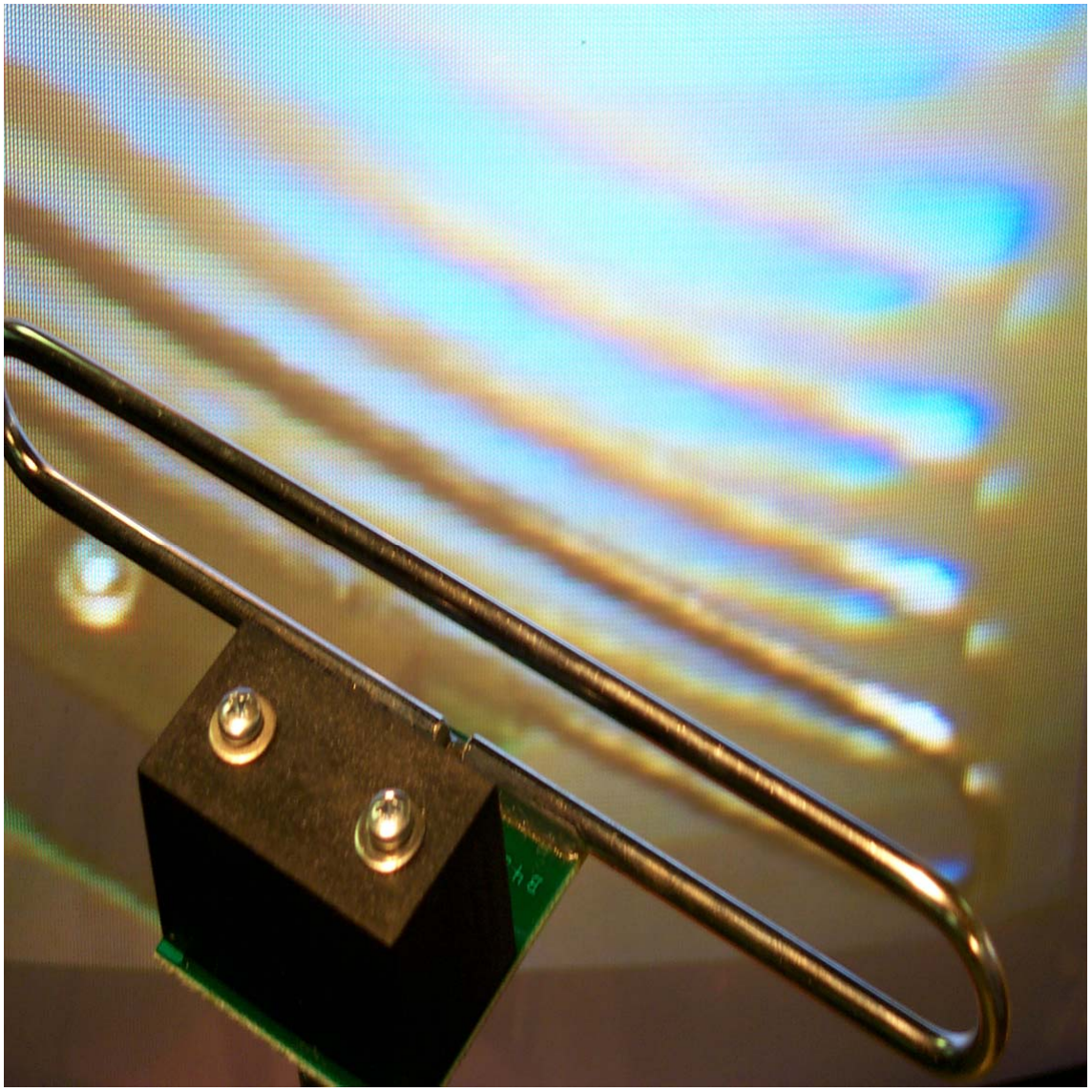

B4520 – ANTENNA TRAINER

General:

The trainer consists of a main cabinet (520 x 300 x100mm) and a case containing the antennas, accessories and parts required to perform the experiments.

The main cabinet is designed for desktop use, made of aluminium, painted in blue and with silk print on the front face showing the system block diagram and unit interconnections.

This frequency range is immediately above the TV UHF band V and below the band reserved for cellular communications; this avoids the disturbance of existing services. The transmitter operates at a limited power level (less than 100 mW) to make the risk of disturbance quite remote.
The elevated frequency allows the reduction in the size of the antennas and of the trainer as a whole. This gives the advantage of an easier operation of the system on the test bench of a laboratory.

Study topics:

- Set-up of a typical Antenna test bed

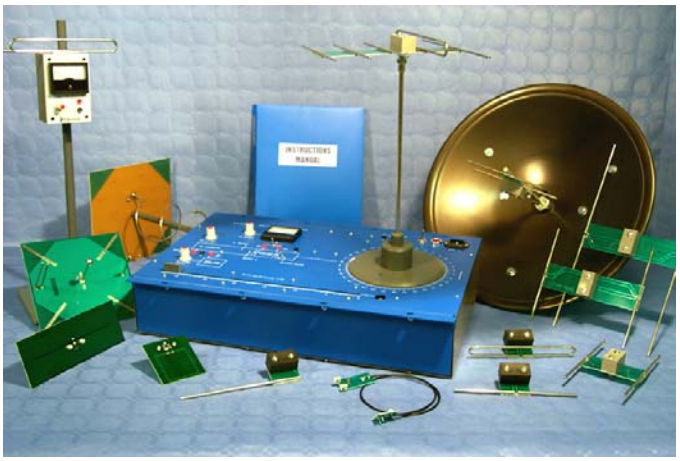

- Review of theory basics
- Basic set-up
- Generator adjustments
- The matching stub
- SWR measurements
- Radiation polar diagrams
- Half-Wavelength dipole
- Half-Wavelength folded dipole
- YAGI-UDA antenna
- Horizontal End-fed antenna
- Ground plane
- Slot antenna
- Loop antenna

The following is a complete list of the components available with the training system.
The components marked **(B)** are included in the **Basic** trainer configuration.
The components marked **(K)** are added to provide an **Expanded** trainer configuration (B4520-K).
The components marked **(O)** are **Optionals** which can be provided to fulfill specific training requirements.

(B)	1	B4520 – GENERATOR PANEL
(B)	2	MAST AND BASE
(B)	3	DETECTOR
(B)	4	HALFWAVE DIPOLE ANTENNA
(B)	5	HALFWAVE FOLDED DIPOLE ANTENNA
(B)	6	YAGI-UDA ANTENNA
(B)	7	HORIZONTAL END-FED ANTENNA
(B)	8	GROUND PLANE (MARCONI) ANTENNA
(B)	9	SLOT ANTENNA
(B)	10	LOOP ANTENNA
(K)	1	LAMBDA ¼ ANTENNA
(K)	2	LAMBDA ½ ANTENNA
(K)	3	COMBINED COLLINEAR ANTENNA
(K)	4	HELIX ANTENNA
(K)	5	ANTENNA CURRENT SENSOR
(O)	1	PARABOLIC ANTENNA
B4521		ROTATING ANTENNA PLATFORM

B4520-B1 Generator panel:

This unit basically contains the RF generator, modulating signal generator, SWR meter and antenna matching facilities.

The RF Generator operates at a frequency adjustable in the range of approx. 850 to 950MHz. This unit is provided with an amplitude-adjustable sine wave generator (approx. 2Vpp, 1.5kHz) to be used as a test signal for modulation of the RF generator.

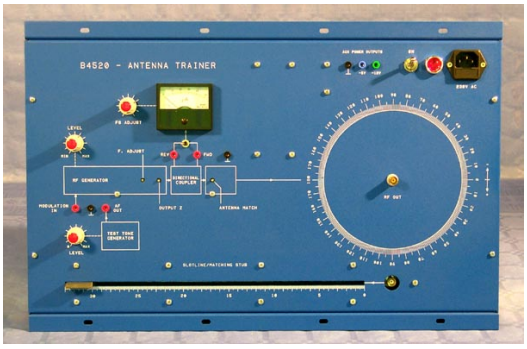

Features:

- A Directional Coupler allows separate metering of forward and reverse power. This device is used during the experiments as an aid to match the generator to the load and to measure the STANDING WAVE RATIO in the transmission line to the antennas.
- A Slot line/matching stub is included and can be used as a matching element for the antennas, and to experiment certain aspects of signal propagation in transmission lines.
- The panel has a circular scale graduated in degrees to allow the determination of the desired angular orientation of the antenna being studied.
- Knob-adjustable output power level for the generator
- Facilities for matching of different loads
- Modulating input (AM) that can be used with the on-board low frequency generator or with an external source
- Heavily mismatched loads (short or open) are indefinitely supported. In extreme cases the generator stops oscillating and latches up in protection.

The unit has an on-board power supply from AC mains 50-60Hz, 230V nominal (other ratings available on request).
In addition to providing the voltage required for internal operation, the Power Supply provides two service outlets at 5 and 12V stabilized (100mA).

B4520-B2 – Coaxial mast and base:

The mast leads in the RF signal from the generator output connector (center of the protractor scale) to the antenna under test, which is mounted on the top connector of the mast.

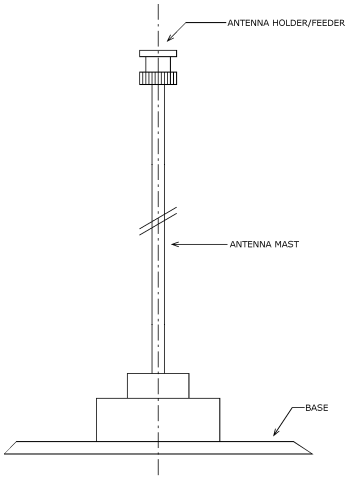

B4520-B3 – Detector assembly:

This item is used to detect and measure the radiation pattern of the antennas under study. It is a completely passive instrument; no batteries are required, thus simplifying use and maintenance of the device.
The unit offers the possibility of hand-held use for approximate exploration of radiation patterns or mounted on a base stand for precise orientation and stable measurement results.

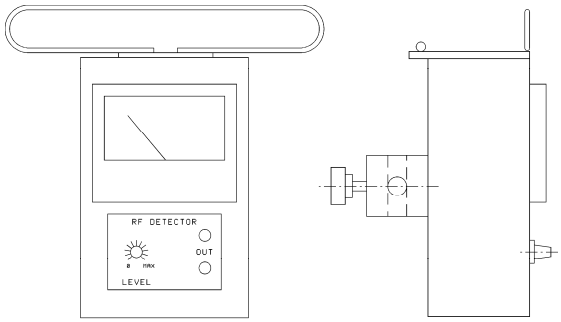

A folded dipole is used as a receiving antenna, and is provided with reflector to reduce possible disturbance to the measurements due to reflection of waves from objects and laboratory walls behind the detector.

The detector has a knob-adjustable signal attenuator.

The demodulated signal is also available on sockets and this enables the connection of external measurement instruments (oscillo-scope).

B4520-B4 – Half-Wavelength dipole:

The top of the antenna consists of a plastic cap enclosing the Balun device. The nominal impedance of this antenna is 73Ω. The antenna is provided with a "Y match" arrangement connection to make its operation free from construction constraints, thus approaching as much as possible the theoretical expectancies.
The typical radiation pattern is in the horizontal plane for this antenna.

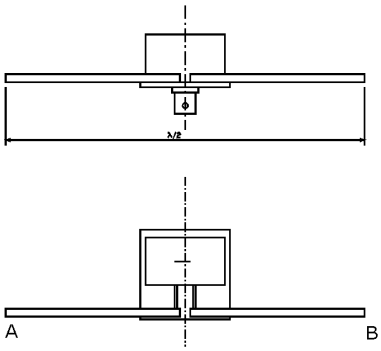

B4520-B5 – Half-Wavelength folded dipole:

Compared to the simple dipole this antenna has a substantially higher radiation resistance (nominally approx. 300Ω) for the presence of the folded arm.
A matching element (Balun) is provided, enclosed in a plastic cap.
The typical radiation pattern in the horizontal plane for this antenna appears like for the case of the simple dipole. The polarization is horizontal.

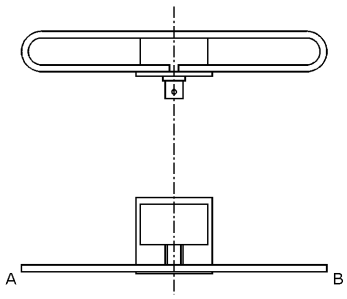

B4520-B6 – YAGI-UDA antenna:

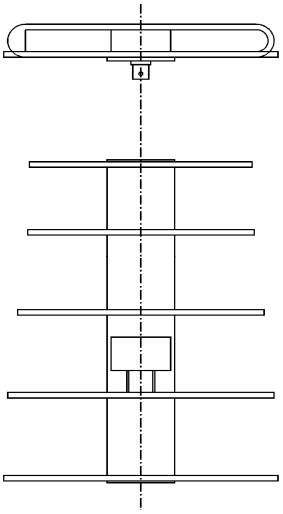

This antenna consists of a folded dipole with a reflector and three directors.
The main characteristics of this type of antenna are elevated directionality and high gain.
A Balun device is enclosed in the plastic gray cap for matching purposes.
The nominal impedance is 75Ω.

B4520-B7 – Horizontal End-fed antenna:

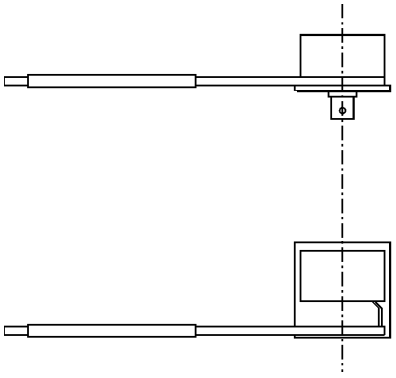

The original idea of a horizontal end-fed wire antenna has been applied in a great variety of forms.
The model of Horizontal End-Fed antenna included in the trainer consists of a piece of brass rod provided with a tubular sleeve, whose position is adjustable to vary the effective length.
The matching device is a step-up, single-loop transformer.
The antenna radiates a horizontally polarized wave.

B4520-B8 – Vertical End-fed antenna:

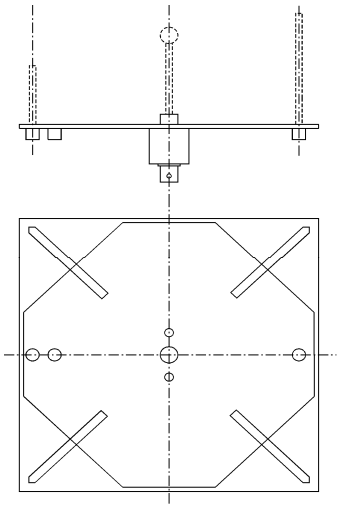

This antenna consists of a piece of wire (a rod in our case) placed vertically at the end of a coaxial feed line.
This antenna takes various names depending on its implementation details. The most common are GROUND PLANE and MARCONI.

Radiation from this antenna is vertically polarized, so that in order to detect its signal, the detector must be mounted on its stand 90° rotated on its axis.

B4520-B9 – Slot antenna:

This antenna is constructed in the form of a half-wavelength-long slot in a metal sheet. The device is fed at the middle of the slot, on opposed sides.
This antenna can be regarded as a derivation of a basic $\lambda/2$ dipole, thus allowing the study of the Babinet theorem
The wave polarization is to the long edges of the slot, so that in this case is vertical.

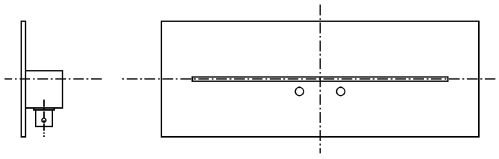

Recording of the radiation pattern of this antenna requires detector to be mounted rotated 90° on its axis.

B4520-B10 – Loop antenna:

This antenna consist of a multiple loop arrangement. The total loop perimeter is a multiple of one half-wavelength.
The currents flowing in the opposed sides of the arms of the loop add up and subtract their effects to the radiated wave, so that the radiation diagram appears to have a rather odd and unexpected lobe pattern.

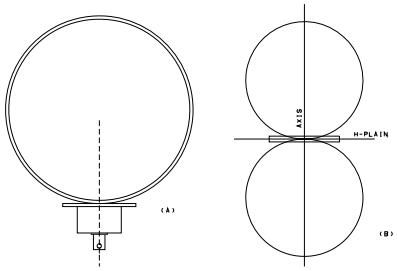

Minor accessories included in the trainer:

- Power cord
- BNC-BNC coax cable
- BNC Tee

B4520-K – EXTENSION KIT

These items are additive optionals to the basic trainer configuration and may or may not be included in the trainer on customer request.

B4520-K1 – Lambda/4 Phase Array (End-Fire Antenna):

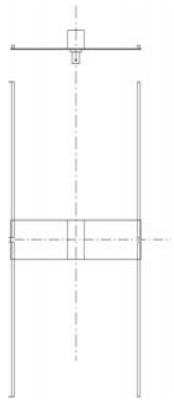

The two-element antenna has the appearance of two half-wave dipoles connected in parallel. The spacing of the dipoles is ¼ the wavelength.
The operating principle is that the spacing of the radiating elements creates zones of phase addition and others of cancellation. The term End-Fire is also used for this type of antenna.

B4520-K2 – Lambda/2 Phase Array (End-Fire Antenna):

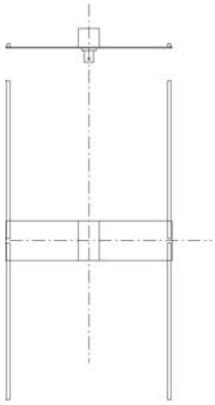

This is a practical example of a combined Antenna Array (stack).
A collinear antenna is the combination of 2 end-fed $\lambda/2$ horizontal dipoles. This array can be therefore regarded as a stack of 2 collinear antennas or a combination of 4 $\lambda/2$ monopoles.
The resulting radiation pattern resembles that of the classic $\lambda/2$ dipole, but has a narrower beamwidth angle.

B4520-K3 – Combined Collinear Array (Stacked antenna):

This consists of two half-wave dipole antennas joined end to end. The assembly is called a Collinear Array. The radiation pattern of the collinear is similar to the reference half-wave dipole antenna, but has a narrower beamwidth angle.
A stack of collinear antenna can be built by placing Collinears aside one another, in the sense of the main axis. The result will be a further narrowing of the beam.

B4520-K4 – Helix antenna:

The Helical Beam Antenna or Helix Antenna, has nearly circular polarization and is generally constructed with a high number of turns for greater directivity and gain.
This example of the Helix Antenna has only a few turns to make this device of a more practical use inside the laboratory, while allowing the experimentation of the basic properties of this type of antenna.

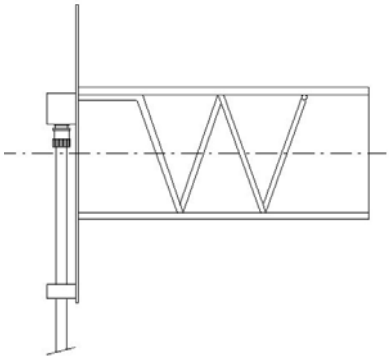

B4520-K5 –Antenna current sensor:

This device consists of a sensing loop with a rectifying diode and capacitor.
When the sensor is placed in the neighbourhood of a radiating antenna element, a part of the variating magnetic flux crosses the sensing loop and develops a voltage along it.
This voltage can be rectified and then smoothened by a capacitor, will appear as a DC output of the sensor.

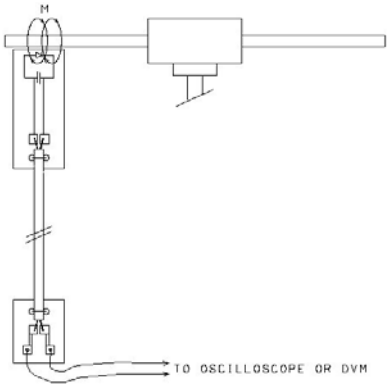

Optionals:

B4520-O1 – Parabolic-Reflector antenna:

The parabolic-reflector antenna pattern is included in the trainer to allow an insight into this class of devices. The frequency of operation of the trainer is sufficiently high to let the student perceive the principles of operation.
The feeder of the antenna model consists of a dipole and a director. The position of the dipole can be axially adjusted to experiment antenna focusing.

Ordering codes:

Antenna trainer in its basic configuration: B4520-B
Kit of additional antennas and accessories (listed in the table on page No.1): B4520-K
Parabolic-reflector antenna – B4510-O1
Rotating antenna platform – B4521

B4521 – ROTATING ANTENNA PLATFORM

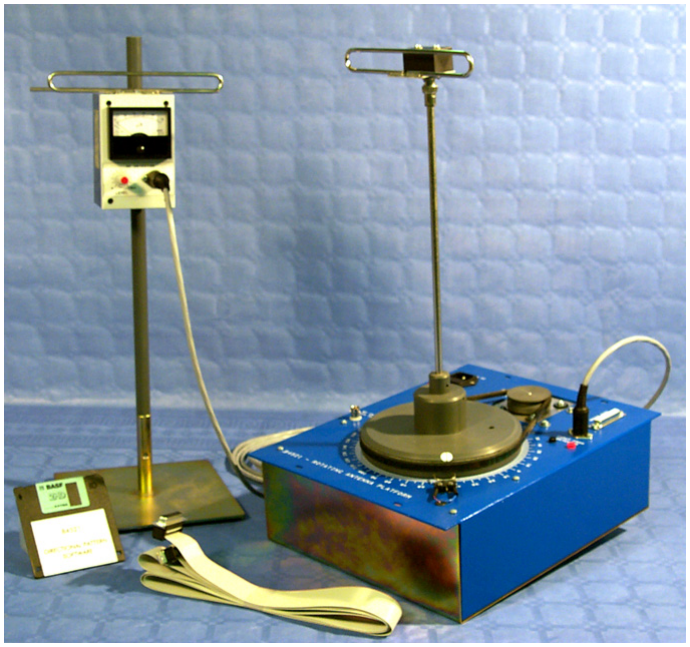

General:

This item is to be considered an accessory to the B4520 antenna trainer, optionally provided wherever it is required to automate the recording of the radiation pattern of the antennas under study.

Normally this operation is performed moving by hand the transmitting antenna at different angles and measuring the radiated intensity. The B4521 consists of a motorized platform whose position is computer controlled.
The detected signal is monitored by the computer and is then automatically plotted against the angle position of the antenna, thus constructing the polar diagram in an efficient manner.

The recorded information can be displayed in graphic form on the PC screen and/or printed out as necessary. In addition the data file can be saved/retrieved on disk for subsequent use.

Features:

- AC mains power-supply at 220V, 50-60Hz (other voltages on request)
- Automatic Zero Point setting
- RS232 data link
- Kit of accessories and cables
- 2 Directional Pattern Software packages, respectively running under DOS or Windows on IBM or compatible machines.

The unit comes complete with an extensive instructions manual.

Ordering code:

B4521